IMPLEMENTATION OF A MOBILE UNINTERRUPTIBLE POWER SUPPLY - DEVICE

Hans-Juergen Wernegger[1]*, Wolfgang Waldner [2], Bernhard Obersteiner [3] Michael Rauter[4], Herbert Sautner[5], Alexander Sautner[6], Karl Etzer[7]

[1]KNG-Kaernten Netz GmbH, Kirchengasse 104, 9020 Klagenfurt, Austria
[2]KNG-Kaernten Netz GmbH, Kanzelweg 19, 9523 Landskron, Austria
[3]KNG-Kaernten Netz GmbH, Kirchengasse 104, 9020 Klagenfurt, Austria
[4]Kelag, Kirchengasse 104, 9020 Klagenfurt, Austria
[5]Sapotec, Münchner Bundesstraße 144, 5020 Salzburg, Austria
[6]Sapotec, Münchner Bundesstraße 144, 5020 Salzburg, Austria
[7]Sapotec, Münchner Bundesstraße 144, 5020 Salzburg, Austria
**hans-juergen.wernegger@kaerntennetz.at*

Keywords: DISTRIBUTION GRID, MAINTENANCE STRATEGY; UNINTERRUPTIBLE POWER SUPPLY; IN ONE SYSTEM; TRAILER SOLUTION

Abstract

Uninterruptible power supply systems (UPS-Systems) were used especially in the electrical power generation, transmission and distribution to supply primary and / or secondary components. Due to serious disadvantages of the “old” UPS-emergency concept the KNG-Kaernten Netz GmbH realised in cooperation with the company Sapotec a new mobile UPS-device. Since then, the KNG has a unique device available for maintenance in the field of UPS-systems, which combines the properties "quickly available", "mobile", "universally applicable", "efficient / effective", "reduced risk potential and ergonomic stress on employees" in one system. The device has already proven itself in numerous missions in power plants, sub- and switching stations and is representative for an innovative improvement for the maintenance in the field of UPS-Systems.

1. Introduction

Secured or uninterruptible power supply (UPS) systems are used wherever, for operational and / or safety reasons, particularly where critical AC / DC consumers or loads must be still operated in the period time of supply interruptions (planned / unplanned). Such systems were used especially in the electrical power generation, transmission and distribution to supply primary and / or secondary components such as station computer, field control devices, voltage and resonant earthed system controller, protection devices, communication devices, fire alarm systems, emergency lighting systems, horn voltages, motor voltages for disconnectors and circuit breakers, etc. In order to guarantee an uninterrupted power supply in the event of planned and unplanned disconnection of the UPS system (due to maintenance, expansion or malfunction), a special UPS-emergency concept was developed by the team for UPS-maintenance of the KNG-Kaernten Netz GmbH (short KNG). This concept (old concept) provides a complete construction (i.e. transportation, construction and interconnection) of a full UPS-replacement-system on site.

Advantages of this concept (+):

- several parallel systems at the same time

Disadvantages of this concept (-):

- availability of the system
- extremely high stress on the musculoskeletal system
- increased risk potential with interconnection
- realisation time
- required staff for construction and commissioning at least two men

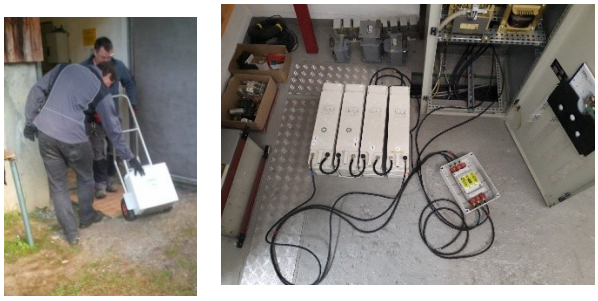

Figure 1)Transportation and interconnection of the old concept

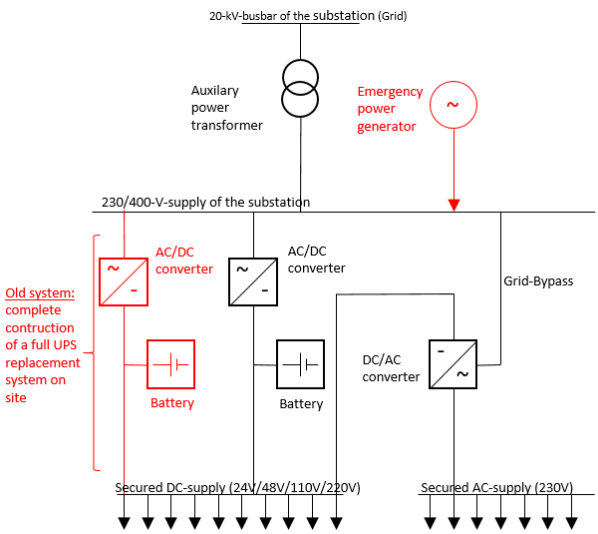

Figure 2) Diagram of the UPS-System of a substation (red …emergency systems)

Due to the serious disadvantages of this concept, the KNG realised a new mobile UPS-device in cooperation with the company Sapotec.

2. Methodology

The specification of the technical requirements of the system and the implementation schedule was based on several coordination meetings between employees of KNG and Sapotec.

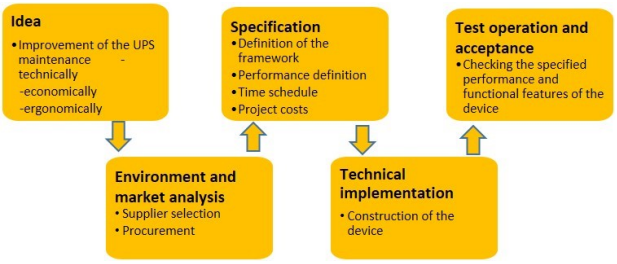

Figure 3) Development phases of the mobile UPS-device

2.1. *Requirements for the mobile UPS-device:*

- Usable for all weather conditions
- Required staff for construction and commissioning: one man
- All three voltage levels are available separately at the output with their own battery
- Remote reporting via SMS (short message service) / NLS (network control system)
- High availability and mobility based on a trailer solution:
  - Length: max. 2500mm
  - Width: max. 1240mm
  - Hight: max. 1240mm
  - Weight:max.2500kg, dead weight trailer 660kg
- All common DC voltage levels of KNG available in parallel on one device
  - Input: 400/230VAC, 16A CEE-connector 5-pole
  - Output: 24VDC, 48VDC,110VDC
  - Output current at 24V: max. 100A
  - Output current at 48V: max. 80A
  - Output current at 110V: max. 50A Self-monitored with an independent fault reporting system

2.2. *Construction of the rectifier system*

In order to fulfil the required characteristics of "quickly available", "mobile" and "universally applicable", the individual three rectifier plants must be combined into one plant. To save weight, an aluminium-floor-standing cabinet should be used as the basis for holding the rectifier systems as well as all other required components to operate the UPS-device. Also the SMS (short message service) / NLS (network control system) remote reporting should be placed in this cabinet. Figure 4 shows the placed components on the front of the new designed cabinet.

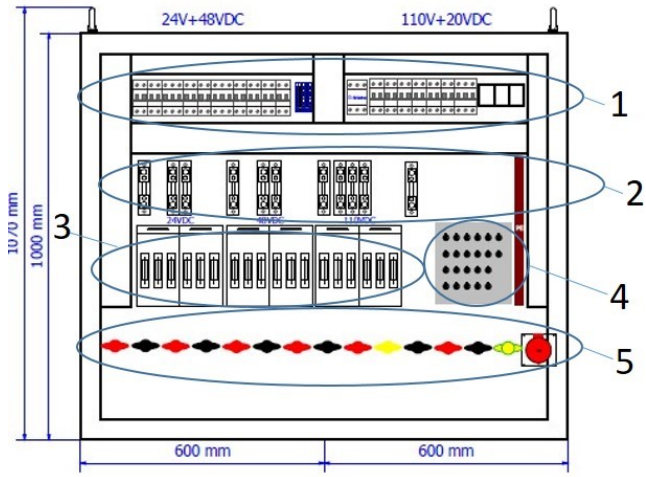

Figure 4) cabinet front side without 19“ installations

Legend to Fig.4)
1…circuit breaker
2…current shunts
3…fuse switch disconnector
4…SMS (short message service) - panel
5…pole terminals

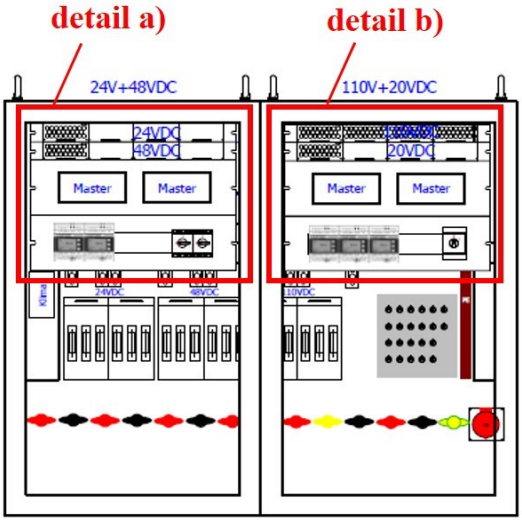

Figure 5) cabinet front side with 19" installations (details a, b)

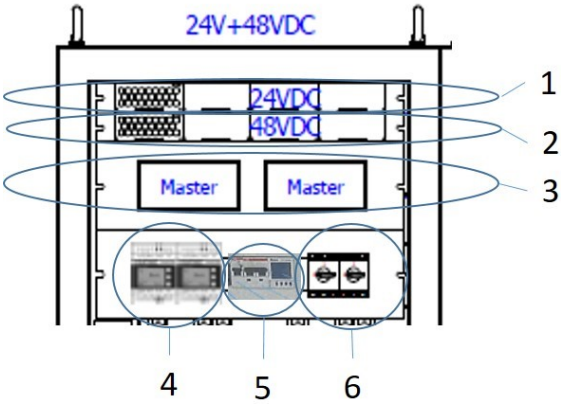

Figure 6) 19" installations, detail a)

Legend to Fig.6)
1,2.rectifier plug-in units 24V/48V
3…control units 24V/48V
4…voltage monitoring 24V/48V
5…circuit breaker and fan control
6…ground pole switch

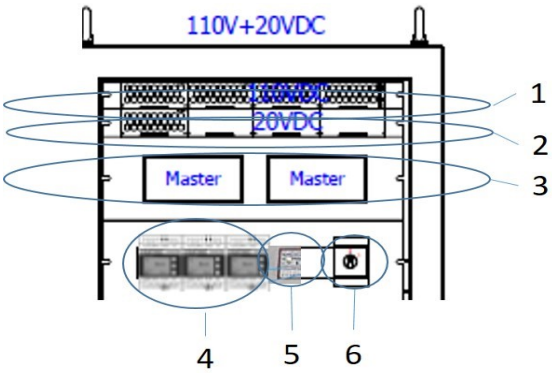

Figure 7)19" installations, detail b)

Legend to Fig.7)
1…rectifier units 110V
2…rectifier units 24V (addition cell technology)
3…control units 110V / 24 V
4…voltage monitoring
5…grid monitoring relay
6…power supply switch of the trailer

There was not enough space to place all the components on the front of the cabinet, therefore some of them had to be installed on the back side. The following illustration shows the back side of the rectifier cabinet.

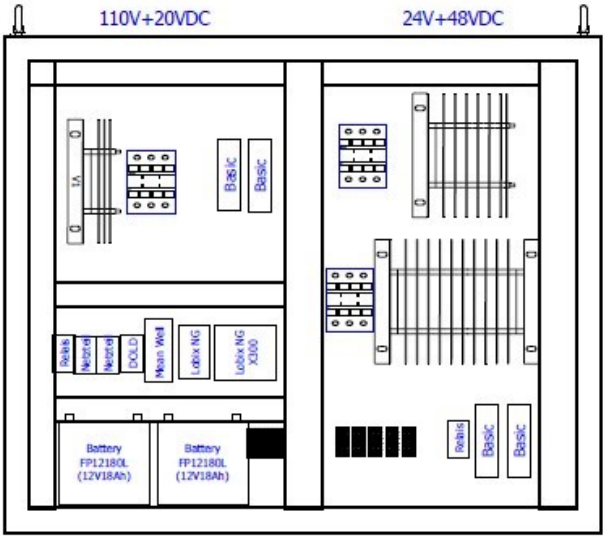

Figure 8) Cabinet back side

In the upper area you can see the diodes (counter cell- and additional cell) with the associated circuit breakers, in the middle the time relay for the fan, the power supply, the remote reporting system and the rectifier for the control voltage, furthermore the mobile alarm unit and the signal contacts for SMS-transmission and on the bottom the control batteries.

2.3. Battery system

The construction and transport of the batteries are realised by battery troughs on the aluminium frame. The rectifier systems and the battery systems are both fix mounted with the trailer and must not be un- or uploaded any more at the place of use.

In order to keep the center of gravity of the trailer as low as possible, the batteries were arranged on the floor of the trailer on two levels – on the bottom of the trailer the battery systems for 110V and above the two battery systems for 24V and 48V.

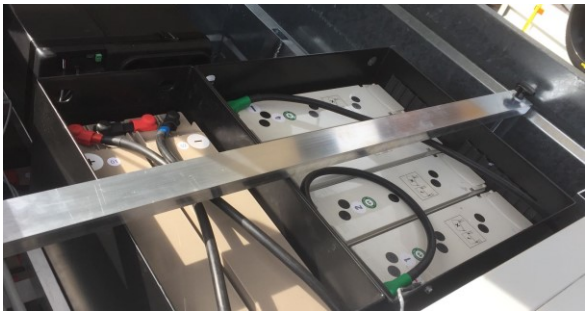

Figure 9) battery throughs (24V and 48V)

2.4. *Trailer*

A special aluminum frame was designed and manufactured to compactly combine the rectifier and battery systems. In order to secure the aluminum frame on the trailer against slipping, it was dimensioned in such a way that it fits into the trailer with millimeter precision. With specially provided forklift pockets, the entire contents can be lifted with a forklift and, if desired, be set down permanently. The frame is also equipped with lifting eyes at all four corners so that the system can also be lifted and transported with a crane in case of an emergency. Figure 10 shows the design of the aluminum frame - the rectifier cabinet is a gray block, the three battery trays are placed behind as boxes (in red and black).

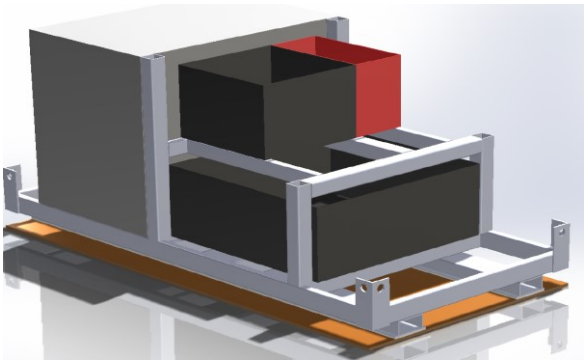

Figure 10) Aluminium frame to hold the rectifier system and the batteries

2.5. *Air conditioner*

In order to prevent overheating of the system during operation and to extend the life time of the batteries, an air conditioning system must be taken into account in the overall concept. Since the installation of a conventional air conditioning system would be too expensive and, on top of that, the space in the trailer is limited, it was decided in this specific case to install a camping air conditioning system. This system can also be used as a heater in winter. The air conditioner is supplied via the external mains voltage of 230V.

Figure 11) air conditioner

2.6. *Ventilation in the trailer*

According to the Austrian standard ÖNORM EN 50272 "Safety requirements for batteries and battery systems", adequate ventilation must also be provided when using batteries. In order to guarantee the air flow for the batteries, a suitable fan was installed in the trailer lid, which is controlled by a corresponding time relay. For safety reasons (redundancy) there is also a second fan in the trailer lid, which can take over complete ventilation if the first fan is defective.

Figure 12) fan for the trailer

2.7. *The finished UPS-device*

On Fig. 13 you can see the finished UPS-device consisting of the aluminium frame with the forklift pockets, the control units and the battery trays before test operation and acceptance.

Figure 13) New mobile UPS-device (left: UPS-device front and back side without trailer, right: front side with trailer solution)

3. Operating experience

3.1. Storage and transportation of the mobile UPS-system

The trailer is stationed in the KNG maintenance center in Kirchengasse in Klagenfurt and is protected against all weather conditions by a garage. The system's batteries are also constantly charged via the mains voltage. To drive the trailer, you need the Austrian drivers's license E to B (trailer driver's license, trailers up to a permissible total weight of 3500 kg). In the case of longer downhill journeys, intermediate stops are recommended due to the strain on the brakes of the towing vehicle as well as the trailer.

3.2. Connection of the mobile UPS-system

The new mobile UPS-system is used for replacement intervals of rectifiers and battery systems, as well as for temporary, unrecoverable rectifier faults. This allows to activate a stationary UPS-system without interruption, quickly and safely. Since there are different voltages and connection options depending on the system, there are six cable drums on the trailer, each with a 25m connection cable with bayonet locks. Most of them can be connected to the stationary system with adapters without any tools. After checking the voltage and polarity, the system on the mobile trailer is connected in parallel using an NH00 - fuse switch disconnector and the stationary system is disconnected.

Figure 14) Mobile UPS-device in action

3.3. Operation and remote reporting of the mobile UPS-system

The remote reporting system is used to make the technical staff aware in case of a system malfunction or a interruption of the mains voltage. The reporting system is implemented on two levels. In the first level, the error messages are sent via SMS-unit to a specified telephone number. On the second level, the system can be connected to the reporting unit of the stationary system in order to be able to transmit the error messages to the network control center. The system's error messages can be switched on /off or a in a specially test-mode, depending on the intended use. The SMS–panel with the different toggle-switches is illustrated in Fig. 15.

Figure 15)SMS-panel

3.4. Advantages of the system

On one hand, the mobile UPS-device offers considerable time savings - approx. 4.5 man-hours can be saved per maintenance-replacement-operation on one UPS-system (rectifier and battery). Furthermore the whole mobile UPS-device can be operated and activated by only one man. On the other hand, this system now protects the employees' musculoskeletal system - the full ups-replacement-system (batteries and rectifiers) must no more longer be transported to and from the stationary UPS-system. The reporting system works fine so that the technical staff is immediately informed in the event of a system malfunction or an interruption of the mains voltage.

4 Conclusion

After a total implementation period of 4 years, the cooperation project "Mobile UPS-device" between the companies KNG-Kaernten Netz GmbH and Sapotec was successfully completed in the year 2018. Since then, the KNG has a unique device available for maintenance in the field of UPS-systems, which combines the properties "quickly available", "mobile", "universally applicable", "efficient / effective", "reduced risk potential and ergonomic stress on employees" in one system. The device has already proven itself in numerous missions in power plants, sub- and switching stations and is representative for an innovative improvement for the maintenance in the field of UPS-Systems.