Decentralized earth fault compensation in MV-grids - challenges and solutions

Katrin Friedl[1], Lothar Fickert[1], René Braunstein[3], Walter Hipp[3], Robert Schürhuber[1]*

[1]*Graz University of Technology, Inffeldgasse 18, Graz, Austria*
[3]*Energie Steiermark Technik GmbH, Neuholdaugasse 56, Graz, Austria*
** katrin.friedl@tugraz.at*

Keywords: earthing, earth fault compensation, medium voltage, electrical safety, heating of cable

Abstract

Decentralized earth fault compensation coils (EFCC) in resonantly grounded medium voltage networks are becoming increasingly popular. Their installation imposes several requirements on the earthing system in terms of equipment and personnel safety as well as the functionality of the ground-fault protection devices. Based on two practical examples of networks (urban and rural), the challenges and their possible solutions are presented and verified by on-site measurements. Due to the impressed current of the distributed EFCC, the earth potential rise (EPR), the touch voltage, the transmitted voltages to neighboring stations and to the low voltage installation (PEN conductors) have to be analyzed. The role of cable shields in relation to earthing and the influences on the distribution of the zero sequence currents discussed. In addition, this work investigates the currents flowing on the interconnecting cables between two different network areas under fault conditions with different distributions of compensation. The cable shields grounded at both ends are loaded by flowing zero sequence currents. This leads to additional heating of the cables. It is analyzed which zero-sequence currents are permanently permissible in order to avoid a maximum insulation temperature and to prevent additional aging of the cables

1 Introduction

Resonant grounded networks are very popular for medium voltage (MV) grids in many countries of Europe. Due to the increasing grid expansion utilizing cables, the demand for earth fault compensation coils (EFCC) in compensated medium voltage networks is increasing. Instead of a more expensive grid splitting, the installation of decentralised EFCC via earthing transformers is preferred for grid areas with increasing capacitive earth currents I_{CE}. Their installation imposes several requirements on the earthing system in terms of equipment and personnel safety and the functionality of the earth leakage protection devices. This includes station earthing and other galvanically connected earthing systems. The focus is on the earthing systems of MV stations with cable connections, where the cable shields grounded at both ends interconnect the earthing systems of adjacent ring main units (RMU). Likewise, the earthing systems of houses and other buildings in low-voltage networks, which are supplied by these RMUs, are part of this earthing network via the protective earth and neutral conductor (PEN). In order to meet the basic requirements for personal safety, the following aspects must be examined:

- Earth potential rise (EPR, U_{E})
- Touch Voltage (U_{T})
- Distribution of the zero-sequence currents in earth fault conditions to the earthing systems involved
- Effectiveness of cable shields and PEN conductors
- Transferred potential to other ring main units (RMU) and to the via PEN connected consumers (private earthing systems).
- Effects on MV cables and their shields examining the current carrying capacity and heating

To investigate these aspects, two real networks with decentralized EFCCs are generalised as model networks and examined in a structured way.
Model network 1 is a predominantly cable network as will be found in towns.
Model network 2 is a rural network with mainly overhead power lines without effective earth wires. The examined MV substation with the decentralized coil is fed by overhead lines from two sides and feeds into a local cable network.

These two network models can be characterised as a urban and a rural model.

1.1 Model network 1: Urban cable network

In Fig. 1 the generalized model for an urban MV network with decentralized EFCC is shown. The decentralised EFCC is located at RMU m. The cable shields (system) are all connected to the earthing systems of the stations and thus also to the low voltage neutral point of the distribution transformer(s) of the RMU.
The resistances denoted by $R_{\mathrm{E,PEN}}$ represent the total effective earthing resistance of a station as given in fig.3. Since in Austrian secondary stations mainly functional earth and protective

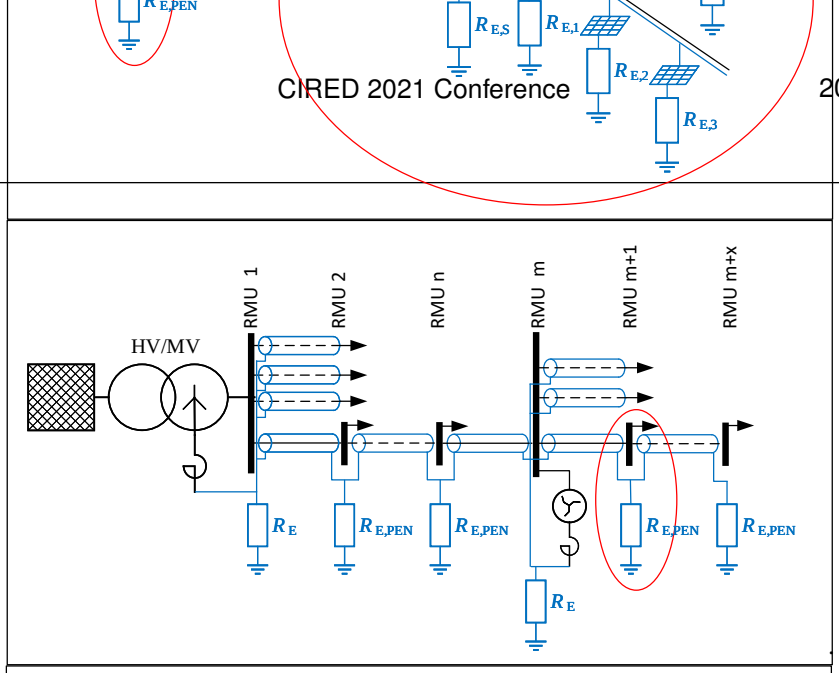

Fig. 1. Model network 1: Urban cable network with dezentralized EFCC at RMU m

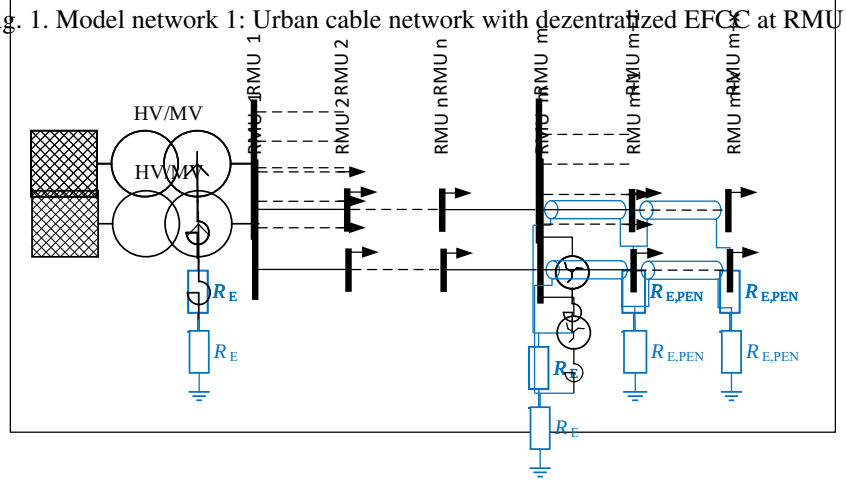

Fig. 2. Model network 2: rural OHL-dominated network with dezentralized EFCC at RMU m

earth are connected with each other, this $R_{E,PEN}$ results from the parallel circuit of the earthing resistance of the station $R_{E,S}$ and the resistances of the earthing systems of (private) buildings or accompanying earth electrodes $R_{E,1}...R_{E,5}$ which are interconnected via the PEN conductor.

The connection between RMU 1 and RMU m is drawn in fig. 1 and 2 as a single line for simplicity, although typically there are at least two connections due to security of supply. The cable shields drawn in each case represent the parallel connection of the shields of individual cables of a system .

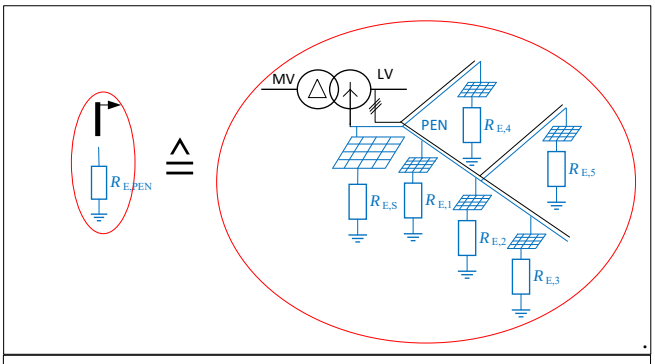

Fig. 3 Effective earthing resistance of station $R_{E,PEN}$ including the earthing resistance of the Station $R_{E,S}$, and the (private) earthing systems of houses ($R_{E,S}$ connected via the PEN

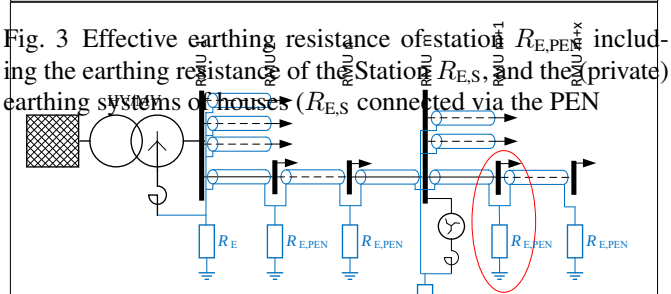

1.2 *Model network 2: rural OHL-dominated network*

Fig. 2 shows a network in a rural area. The main difference is that the connections are predominately with overhead lines (OHLs) instead of cables. The most interesting fact in this constellation is, that only one cable is connected to RMU m, which is feeding several downstreamRMUs. The $R_{E,PEN}$ is again as given in fig. 3 and described in chapter 1.1.

2 Additional earth current input in station with EFCC

The installation of an EFCC in an existing station means additional earthing current in case of a earth fault. The earthing system of an existing station is typically designed that the contact voltage caused by the maximum residual earthing current complies with the limits according to EN 50522 [1] or IEEE St.80 [2] (see Fig. 4).

In contrast to networks with low impedance neutral point treatment, in which faults are disconnected in a short time (<1 s), the ground fault in compensated networks can last up to 2 hours. According to the EN 50522 [1] standard, for these steady state earth faults the touch voltage U_T must be less than 80 V or, for a first estimation, the EPR $U_E < 2 \cdot U_{T,p}$, i.e. less than 160 V.

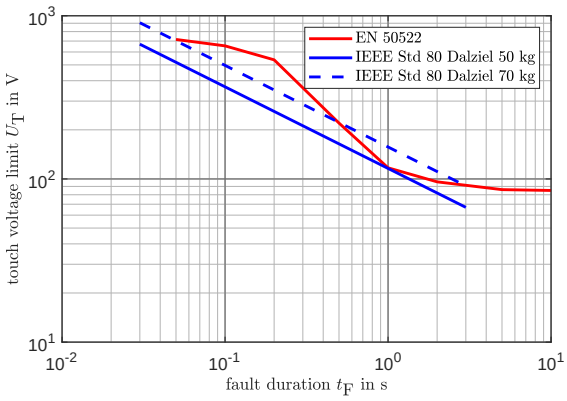

Fig. 4 Tolerable touch voltage limits according to standards EN 50522 and IEEE Std. 80

In stations with EFCCs, not only the residual ground fault current (<60 A), but also the additional current from the EFCC into the earthing system must be considered for determining the EPR. The maximum compensation current I_L of such decentralized EFCCs is typically between $I_{L,max} = 200$ A and 600 A.

In the hypothetical case that no earthing system adjustment is made when installing an EFCC in an existing station and therefore the effective earthing impedance Z_E of the station remains unchanged, the maximum EPR U_E of this station would increase due to the relationship

$$U_E = I_E \cdot Z_E$$

by a factor of 3...10

The effective earthing impedance of the station consists of

1. the resistance of the station earthing system $R_{E,S}$,
2. the chain conductor consisting of cable shields and the earthing resistances $R_{E,PEN}$ of the neighboring RMUs (e.g., RMU $m+1$...RMU $m+x$) taking into account PEN-connected earthing systems, and,
3. if RMU m feeds LV loads, the directly PEN-connected earthing systems (see Fig. 3).

Connections of different earthing systems have both advantages and disadvantages:

1. The effective earthing impedance is reduced, thus lower EPRs and touch voltages occur, which means a lower risk in terms of personal safety.
2. The transmitted voltages, especially to the LV network via PEN, increase and must be investigated with respect to occurring touch voltages in the LV network.
3. The cable shields directly connected to the station have to transport the zero-sequence current to the neighboring RMUs. This leads to additional heating of the cables and has to be analyzed especially for cables with high load during normal operation or if they are the only cables connected to the station as in the example.

The first two points are discussed in section 3, and the effects on cable heating of the third point are discussed specifically in section 5.

3 EPR and transferred Voltages

Fewer connected cable shields mean a higher effective earthing impedance and thus also higher touch voltages or transferred voltages. For a worst-case assessment, the model network 2 according to fig. 2 is therefore examined in more detail here. The model is based on a real grid situation in a rural area in Styria, Austria. An existing switching station was equipped with an EFCC (RMU m in the model) and in the course of commissioning measurements, concerns arose about transferred voltages into the surrounding stations (RMU $m+1$,...) and houses (according to fig. 3).
Two OHLs feed RMU m from the HV/MV substation and two further OHLs feed other grid areas. Only a single cable system is connected to RMU m, feeding most of the towns RMUs.

For measurement of the EPR, touch and transferred voltages and earth current distribution a current of 6...10 A with 55 Hz was injected via one of the two feeding OHLs into the earthing system of the station. The frequency selectively measured voltages and currents are scaled with the maximum inductive compensation current $I_{L,max}$ of the coil.

The measurement of the current in the shields of the cable connection showed that the shields of the cables between RMU m and $m+1$ transport all the current injected to the distributed earthing systems which had much lower earthing resistance, because of the PEN-connected earthing systems.

The measurement of the EPRs of the next three neighbouring stations are given in tab. 1. The EPR (U_E) were measured locally with the fall of potential method. The very low U_E at RMU $m+3$ indicates that there is a global earthing system at this station and no dangerous touch voltages can occur.

The current in the cable shields were only accessible at RMU m, the PEN-conductors were accessible and the currents are given as sum in the row I_{PEN}. The value $R_{E,PEN}$ does not include the resistance of the earthing system of the RMU, because its part could not be measured. Considering the fact that the earthing resistances of the RMUs are in the range of 1...10 Ω, they do not contribute significantly in relation to the resistance 0.14...0.19 Ω (see tab. 1; $R_{E,PEN} = U_E/I_{PEN}$). The very low value for $m+3$ results due the low U_E because of the existing global earthing system.

Table 1 Measured transferred voltages to neighbouring RMUs in case of earth fault scaled to $I_L = 400$ A

RMU	m	$m+1$	$m+2$	$m+3$
U_E in V	126	44	3.1	0.7
I_{PEN} in A	-	233	23	45
$R_{E,PEN}$ in Ω	-	0.19	0.14	0.01

4 Connection between two compensated network areas

The connection(s) between the network area of the central EFCC and the decentralized EFCCs have to be examined in detail. This connection is indicated with a red ellipse in fig. 5. Ideally, both network areas are well compensated for themselves, and no zero-sequence system current has to be transported between those two areas. Two extreme cases can be defined:

- no compensation in area 2
- no compensation in area 1

The difference between the capacitive earth fault current and the compensation current of a zone must be transported via this connection as zero-sequence current in addition to the load current. Due to the mutual inductance between inner conductors and the shields, the shields are additionally loaded with approx. 90 % of this zero-sequence current according to [3].

For illustration, the model given in fig. 5 is simulated in Omicron RelaySimTest. Area 1 is modelled with 5 feeders with 10 km cable network each. One of these feeders is the link to network area 2, which also has 5 feeder, with 10 km cable each. Each of these feeders has a charging current of 18.2 A per phase. Both areas have the same extension and therefrom the same I_{CE}. For usability, no load situation is taken into account. The overall capacitive earth fault current of this network amounts to $I_{\mathrm{CE,1}} + I_{\mathrm{CE,2}} = 3 \cdot 10 \cdot 18.2\ \mathrm{A}\ = 545.1\ \mathrm{A}$.

Without any load and fault the linking cable is loaded symmetrical (only positive sequence system) with the charging current of 6 times the charging current of one feeder (110 A) at RMU 1 or 5 times the charging current (90.9 A) at RMU m, plus the losses due to the transport of the charging currents.

The earth fault location is analysed for two positions, in area 1 at RMU 1 and in area 2 at RMU m. Because this has no relevant influence on the resulting currents on the linking cable, in the following only the results of fault location RMU 1, (fault L1-E) is given.

The main influencing parameter is the distribution of the inductive compensation current between EFCC1 and EFCC2. Therefrom for different distributions of the necessary compensation current on EFCC 1 and 2 the currents in phase values and in symmetrical components are given in tab. 2. This tab.2 gives currents in the link at RMU m in direction from area 1 (indicated with an ammeter in fig. 5).

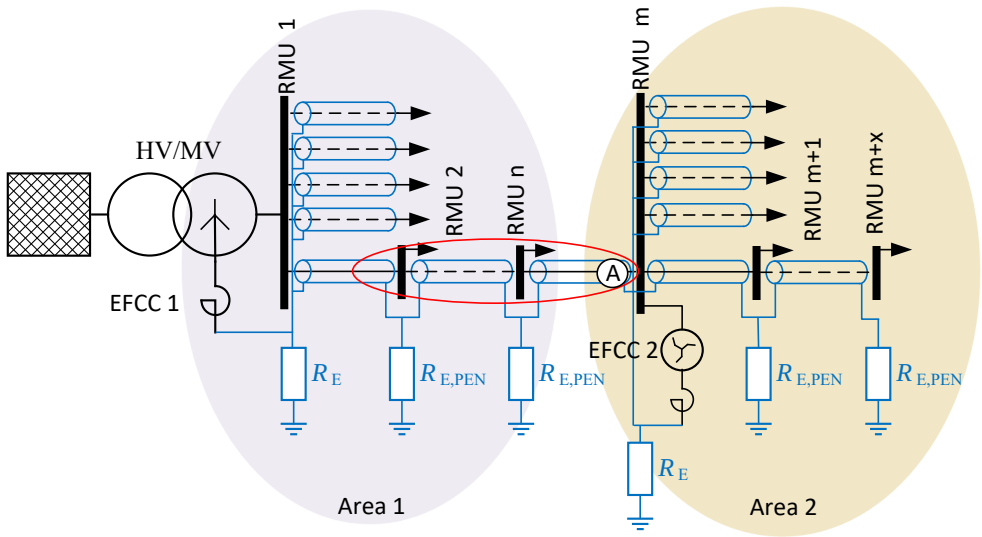

Fig. 5. Connection between two grid areas via cable

Table 2 Phase currents and symmetrical components of the currents of the link between area 1 and 2 from fig. 5 at RMU m, for different distributions of the necessary compensation current between EFCC 1 and 2, phase angle 0° is for $\underline{U}_{\mathrm{L1}}$, +90° for $\underline{I}_{\mathrm{L1}}$ is capacitive current from area 1 to area 2

EFCC 1 EFCC 2	100% 0%		80% 20%		50% 50%		20% 80%		0% 100%	
	A	°	A	°	A	°	A	°	A	°
$\underline{I}_{\mathrm{L1}}$	3	-145	36	91	92	89	145	90	180	90
$\underline{I}_{\mathrm{L2}}$	159	-64	128	-55	89	-33	74	3	82	29
$\underline{I}_{\mathrm{L3}}$	162	-123	130	-131	94	-154	86	172	98	152
$\underline{I}^{(1)}$	92	87	92	87	92	87	92	87	92	87
$\underline{I}^{(2)}$	0	0	0	0	0	0	0	0	0	0
$\underline{I}^{(0)}$	94	-94	56	-95	3	176	54	94	89	94

The balanced distribution is 50 % EFCC 1 and 50 % EFCC 2, meaning here both areas are fully compensated in themselves. It can be seen, hardly a zero-sequence current is transported. For the case of 100 % compensation with EFCC 1 $I_{CE,2}$ is transported from Area 2 to Area 1, and for the opposite case $I_{CE,1}$ to Area 2 . So, in both cases the cable screens are maximal loaded.

Naturally, in parallel links the currents would be distributed between these parallel links according to the ratio of their longitudinal admittance. However, if an OHL is in parallel with a cable, the zero sequence current would flow predominantly in the cable due to the mutual impedance between the inner conductor and the shield.

Even if it is a rural site with many OHLs, the connection to modern stations is mainly by cables. The earthing system of the cable transition tower must carry the displacement currents to ground. Therefore, special attention should be paid to the touch voltage for these poles as well.

5 Thermal loading of the cable due to zero-sequence current

As can be seen in section 2 and 4, zero-sequence currents in the cable shields puts additional thermal stress on the cables. Due to the small cross sections of, for example, 25 mm^2, even relatively small currents cause considerably increased thermal stress on the cables. This reduces the maximum load capacity of these cables.

As shown e.g. in [4], this additional heating can be well estimated with analytical thermal models using thermal resistances for continuous operation. Fig. 6 shows the effect of additional heating due to losses in the shield for a typical MV-PE cable NA2XS2Y 1 x 150 RM/25 as an example. Here, the inner conductors of the cables are loaded with the sum of the symmetrical load current $I^{(1)}$ and the zero-sequence current $I^{(0)}$, and the shield line with 90 % of $I^{(0)}$ each. Time constant of the cables is between 10 min and up to 2h.

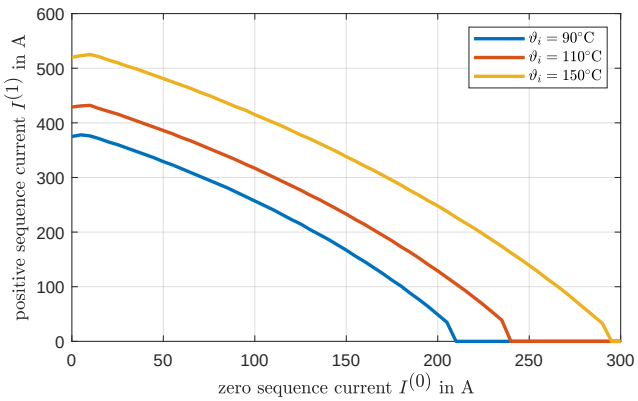

Fig. 6 Maximum symmetrical load current ($I^{(1)}$) in steady state as a function of zero-sequence current $I^{(0)}$ with which a cable is loaded, for various maximum end temperatures of insulation ϑ_i, for a buried cable system NA2XS2Y 1 x 150 RM/25

6 Conclusions

The effective earthing impedance and thus the EPR from the station with the distributed EFCC is mainly determined by the distributed earthing systems, which are connected to the earthing system via the cable shields and PEN conductors.

Zero-sequence currents flow through the interconnecting cables in the event of an earth fault. If these connecting lines are cables, the shields are loaded with approx. 90% of these zero-sequence currents. Shield currents generally lead to additional losses and therefore also to greater heating of the cables, which reduces the load capacity for the symmetrical load currents.

Particularly to be considered with regard to these considerations are:

- cables at stations, where mainly OHL and only few cables are connected to the station
- cables which are already highly loaded in normal operation, especially if they are betwene two EFCCs
- cable transition poles with respect to touch voltages

The transmitted potentials into neighboring stations as well as into the connected PEN conductors were not a problem for the given example. The EPRs of the neighbouring stations have been shown to be below the permissible limits.
However, if consumers are connected directly to a station with EFCC via PEN conductors, it should be checked here in any case whether the limits for the touch voltage are complied with. When using distributed EFCCs in a network, it is best to operate the network in a way the assumed capacitive ground currents are compensated within each network area. Otherwise, the interconnecting cables between the areas will carry the uncompensated zero sequence currents and would cause additional losses in the screens there.

Acknowledgements

Special thanks go to Energienetze Steiermark, Feistritzwerke and Energie Steiermark Technik GmbH for the opportunity and the active support during the analysis and the measurement.

References

[1] EN 50522: ‘Earthing of power installations exceeding 1 kV’, 2010
[2] IEEE St.d 80: ‘IEEE guide for safety in ac substation-grounding’, 2015
[3] Fickert,L., Mallits, M., Resch, M.P.: ‘Globale Erdungssysteme: Bestimmung der Erdungsspannung (EPR) in Mittelspannungs-kabelnetzen im einpoligen Fehlerfall’, e&i Elektrotechnik und Informationstechnik, 2019, 136(1):39—45
[4] Heinhold L., Stubbe, R.: ‘Kabel und Leitungen für Starkstrom’,Aufbaudaten und technische Werte von Kabeln (Siemens, 1976)