Earth fault localization in isolated uninterruptible power supply (UPS) networks – a new approach

Georg Achleitner[1], Lothar Fickert[2], Christian Raunig[1], Wolfgang Huska[1]*

[1]*Austrian Power Grid AG, APG, Austria*
[2]*Institute of Electrical Power Systems, Graz University of Technology, Austria*
**Georg.Achleitner@apg.at*

Keywords: uninterruptible power supply (UPS), earth fault localization, isolated network, personal safety, earth fault

Abstract

In this paper a new approach for earth fault localization in isolated uninterruptible power supply networks is presented and the fault location procedure is described in detail. This paper is focused on DC voltage systems. The detecting device is based on monitoring devices, which recognize the earth fault, a switching device for periodic grounding the faulty phase and a current measurement in each branch.

It is based on well-known insulation monitoring systems and enables a quick and reliable location of the faulty branch in DC systems without switching consumers, as protection devices or other critical control devices off and on for earth fault localization. Additional experiences from substations are presented, where this system is already installed and in operation.

1 Introduction

Uninterruptible power supply networks are used in numerous areas, such as traffic control, substations, power plants and in areas with high demands on security of power supply or personal safety.
In this paper a new approach for earth fault localization is presented. The focus is directed on isolated DC systems.
Due to the special properties of DC voltage networks, some of the protective measures customary for AC voltage networks cannot be implemented in the same way. The design of the electrical network, the consumers and the protective measures thus determine reactions to insulation faults against earth (i.e. an electrical connection of a phase with earth potential). Depending on the application, different requirements are placed on selectivity, speed, sensitivity, accuracy, reliability, independence and economic efficiency.

1.1Earth fault in DC UPS networks

Battery systems are usually designed as isolated networks which enable continuous operation even during a single earth fault, which can arise, for example from cable insulation faults caused by carefree handling while cable laying, animal bites or water treeing. Nevertheless, this fault has to be located and cleared quickly in order to avoid consequential faults, failure of the system and to keep personal safety [4].

Basically, due to normative specifications, an insulation monitoring system must be available in an isolated operated network. A fault is detected by these monitoring systems, but the faulty branch is rarely known, which can lead to longer troubleshooting times.

1.2 Traditional fault localization

Normally troubleshooting is done by switching the miscellaneous branches on and off one after the other. This can take a long time, especially in extensive systems, and represent a major challenge for the operating staff. Furthermore this switching on and off can lead to damage of connected consumers.

Existing automatic fault location systems are based on the injection of localisation currents [5]. These systems need an active source for generation of the injection voltage for change the midpoint of the voltage divider in reference to the ground potential. This change can be detected by detection units. Because of the active injection the source has to be able to inject the voltage in respect to the line-to-earth capacities (networks with a very large extension can cause problems) and as well unwanted effects on other devices can occur.

2. New approach for fault localization

The new approach is based on well-known insulation monitoring systems and enables a quick and reliable location of the faulty branch in DC systems. [2] [3]

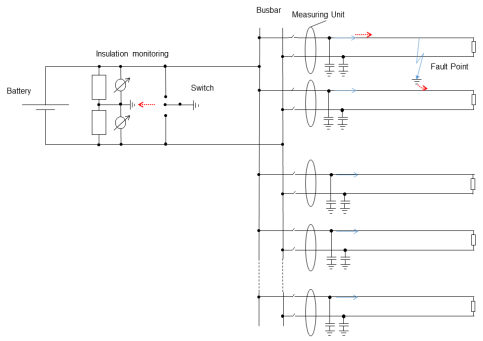

2.1 Figure: Earth fault in a UPS network

An insulation monitoring system is necessary to detect possible insulation faults [4]. This system can be used as a trigger for the fault location algorithm.

As shown in figure 2.1 the new approach uses a voltage divider with a middle point grounding connection and differential current measurement equipment in each branch. The voltage divider itself can be used as an insulation monitoring system. If one phase is grounded to earth the voltage is not equal on both phases anymore. This system is a well know possibility for detecting insulation faults in isolated UPS networks.

The voltage divider offers a defined return path for the fault current.

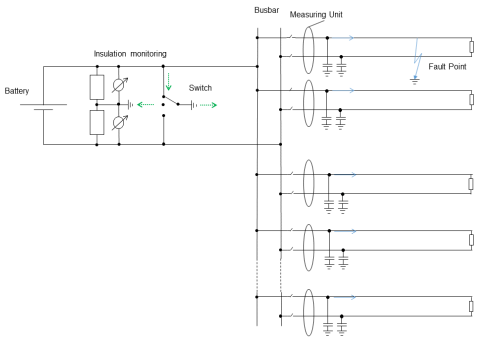

2.2 Figure: Principle of the fault localisation

In the event of an earth-fault, the insulation monitoring detects the faulty phase as a first step. Triggered by this process, in a second step, an additional switch connects the faulty phase near the feed-in to earth. (figure 2.2). This switching leads to a decreased fault current at the fault location as well as to a reduction of possible interferences, while the earth fault in one phase is still unchanged. Furthermore, in contrast to existing systems, no additional fault localization current has to be fed in for fault localization.[1]

In all branches summation current transformers are installed. During normal operation the current measurement in each branch should be zero. During a fault the current increases only in the faulty branch. After closing the switch the fault current is reduced and consequential also the measured current. This change can be detected with very high accuracy and the faulty branch is known.

3 Tests in a substation

3.1Test arrangement

In a UPS network of a 400-kV-substation the new approach was tested in a real environment. A prototype of this fault location algorithm was developed by Sprecher Automation in Austria [6].

Both substation batteries were connected via a diode coupling (figure 3.1.1.). The minus pole was connected directly

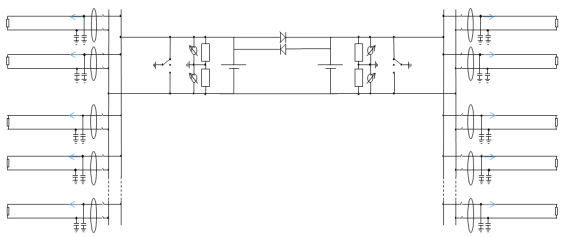

3.1.1 Figure: Test network for the prototype in a 400-kV-substation

For the prototype test each battery system was equipped with the needed hardware for fault localization. Both systems were operating completely autonomous.

For testing purposes both networks were separated.

3.2Test results

In the real network, as described in 3.1., tests with different fault resistances were carried out. The resistances is varied from 0 Ω to 40 kΩ.

Battery-system	Fault resistance [kΩ]	Test result
Battery 1	0, 1, 10, 20, 40	Fault detected
Battery 2	0, 1, 10, 20, 40	Fault detected
Battery 1+2 connected	0	Fault not detected
Battery 1+2 connected	1, 10, 20, 40	Fault detected

3.1.1 Table: Result of simulations with different fault resistances and conditions

When both batteries were connected and a direct earth-fault (0 Ω) was simulated the detection failed. The reason was, that the currents in the network are so high, that the measuring units, which are designed for only small differential currents, were overloaded (saturation effects) and could not deliver any measuring result.

The fault algorithm could detect nearly every fault, independent from the fault distance (up to 500m) and the fault resistance (up to 40 kΩ)

The test have proven the usability of this algorithm. Theoretically higher fault resistances could also be detected but for the tests no higher resistances were available.

4 Experiences from use during normal operation conditions in different substation

Since 2017 this system was installed in several substation of Austrian Power Grid AG in Austria.

4.1Experience of Operational staff

Experiences from the operational staff are very positive, because the fault localization is reliably and fast. For example when there are construction work in the substation and working companies damage a UPS cable, the fault is identified immediately.

4.2 Experiences after reconstruction

After a reconstruction of the UPS network in a substation very high ohmic connections of both batteries, which should not exist, could be detected. These undesired connections were in operation since many years and were not detected by the prior installed conventional monitoring systems.

4.3. Note to protection supply with diode coupling

Protection devices are supplied via two connections from the battery. These connection are coupled via diodes. For detection both connections have to be summed up. Otherwise there will always be a differential current because of variations between the diodes. (figure 4.3.1)

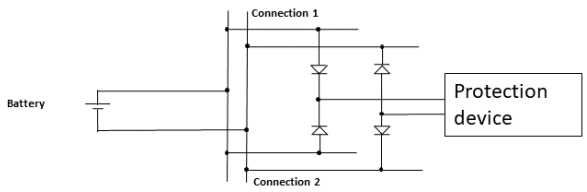

4.3.1 Figure: Principal scheme of the power supply for protection devices

4.4. Mobile unit

Additional a mobile fault localization device was designed for substations, which are too old or the space available for the implementation of a fixed installation is not given. With this mobile unit an earth fault can be located without manually operated switching of devices as protection or control units.

5 Summary

Uninterruptible power supply networks based on DC voltage systems are used in lots of critical areas. These networks normally operated as isolated networks where a monitoring system for the detection of insulations faults are needed.
However these systems normally cannot locate the faulty branch.
The new approach shows a simple and easy possibility to detect the faulty branch. By use of components such as a simple switch and resistors as well as avoidance of active current injection not only the earth fault can be detected but also the fault current at the fault point is reduced.
This intended current difference of the faulty branch can be detected and analysed easily.
Tests in a substation have not only proven the usability of the algorithm but also shown, that fault resistances up to 40 kΩ can be identified and detected. Furthermore there are no limitations regarding long cable lengths and corresponding cable capacities.
Experiences after installations in a number of substations show a very high acceptance by operational staff. The required time for fault location is reduced significantly compared to previous monitoring systems.
At the moment investigations are done to extend this method to AC UPS networks.

6 References

Patent
[1] Achleitner, Fickert, Raunig, „Schaltungsanordnung zum Lokalisieren von Isolationsfehlern“, EP 2796886 A1

Conference Paper
[2] Achleitner, Fickert „Erdschlussortung in Batteriesystemen – ein innovativer Ansatz“, Energiesymposium 2016, TU Graz, Austria
[3] Achleitner, Fickert, Raunig „Erdschlussortung in Batteriesystemen“, Sternpunkttagung 2017, Germany

Standard
[4] IEC 60364-4-41:2005 Low-voltage electrical installations – Part 4-41: Protection for safety – Protection against electric shock
[5] Electrical safety in low voltage distribution systems up to 1 000 V a.c. and 1 500 V d.c. - Equipment for testing, measuring or monitoring of protective measures -- Part 9: Equipment for insulation fault location in IT systems (IEC 61557-9:2014)

Website
[6] Sprecher Automation: „Sprecon Isocout“ https://www.sprecher-automation.com